SYMBOL LEGEND

- EXISTING DCW PIPING TO REMAIN
- EXISTING DHW PIPING TO REMAIN
- NEW DCW PIPING
- NEW DHW PIPING
- VALVE
- PIPE THERMOMETER
- FLOOR DRAIN
- UNION
- RELIEF VALVE
- NEW VACUUM BREAKER

1 M-2 SYMBOL LEGEND – PLUMBING SCALE: N.T.S.

PIPE SECTION	NATURAL GAS LOAD	EQUIVALENT LENGTH	MINIMUM SIZE	PIPE SIZE
PIPE SIZE CALCULATIONS FIRST STAGE – 5 PSI				
Ⓐ to Ⓒ	–	325'		
Ⓑ to Ⓒ	930 MBH	20'	NPS 1	NPS 1
SECOND STAGE – 11" W.C.				
Ⓓ to Ⓖ	–	23'		
Ⓓ to Ⓔ	930 MBH	15'	NPS 1–1/4	NPS 1–1/2
Ⓔ to Ⓔ1	310 MBH	2'	NPS 1	NPS 1
Ⓔ to Ⓕ	620 MBH	3'	NPS 1–1/4	NPS 1–1/2
Ⓕ to Ⓕ1	310 MBH	2'	NPS 1	NPS 1
Ⓕ to Ⓖ	310 MBH	5'	NPS 1	NPS 1

NOTE:

1. PIPE SIZES TAKEN FROM TABLE A.5 AND A.2 OF CSA STANDARD CAN/CSA B149.1–05.
2. TOTAL EQUIVALENT LENGTH DERIVED FROM TABLE A–16 OF CSA STANDARD CAN/CSA B149.1–05.

2 M-2 NATURAL GAS PIPE SIZING CALCS SCALE: N.T.S.

GENERAL NOTES

1. ALL NATURAL GAS WORK TO BE COMPLETED IN ACCORDANCE WITH ALL AUTHORITIES HAVING JURISDICTION, CAN/CSA B149.1–05 NATURAL GAS AND PROPANE INSTALLATION CODE, CAN/CSA B149.3 AND TO THE APPROVAL OF THE NEW BRUNSWICK DEPARTMENT OF PUBLIC SAFETY.
2. CONTRACTOR SHALL HAVE ALL REQUIRED LICENSES AND REGISTRATIONS TO PERFORM THIS WORK.
3. CONTRACTOR SHALL PAY ALL COSTS FOR INSPECTION AND REGISTRATION OF THIS SYSTEM.
4. CONTRACTOR TO PROVIDE A CERTIFICATE OF ACCEPTANCE FROM THE NEW BRUNSWICK DEPARTMENT OF PUBLIC SAFETY.
5. STEEL PIPE TO BE ASTM A53, SCHEDULE 40 SEAMLESS.
6. BALL VALVES TO BE PROVINCIAL CODE APPROVED. INSTALL VALVES ON ALL BRANCHES AND WHERE REQUIRED BY CODE. REPLACE ALL EXISTING BALL VALVES THAT ARE NOT IN ACCORDANCE WITH CAN/CSA–B149.1–05.
7. PRIME COAT, PAINT AND IDENTIFY PIPING IN ACCORDANCE WITH CODE CAN/CSA–B149.1–05.
8. PRESSURE TEST AND PURGE SYSTEM IN ACCORDANCE WITH THE REQUIREMENTS OF THE INSTALLATION CODE CAN/CSA–B149.1–05.
9. CONNECT TO EQUIPMENT IN ACCORDANCE WITH MANUFACTURERS INSTRUCTIONS.
10. SLOPE PIPING TO LOW POINTS IN DIRECTION OF FLOW AND INSTALL DRIP POINT AT ALL LOW POINTS AND AT EQUIPMENT.
11. PROVIDE VENTING AS REQUIRED BY CODE.
12. COORDINATE WITH ALL OTHER TRADES AS REQUIRED.

3 M-2 NATURAL GAS NOTES SCALE: N.T.S.

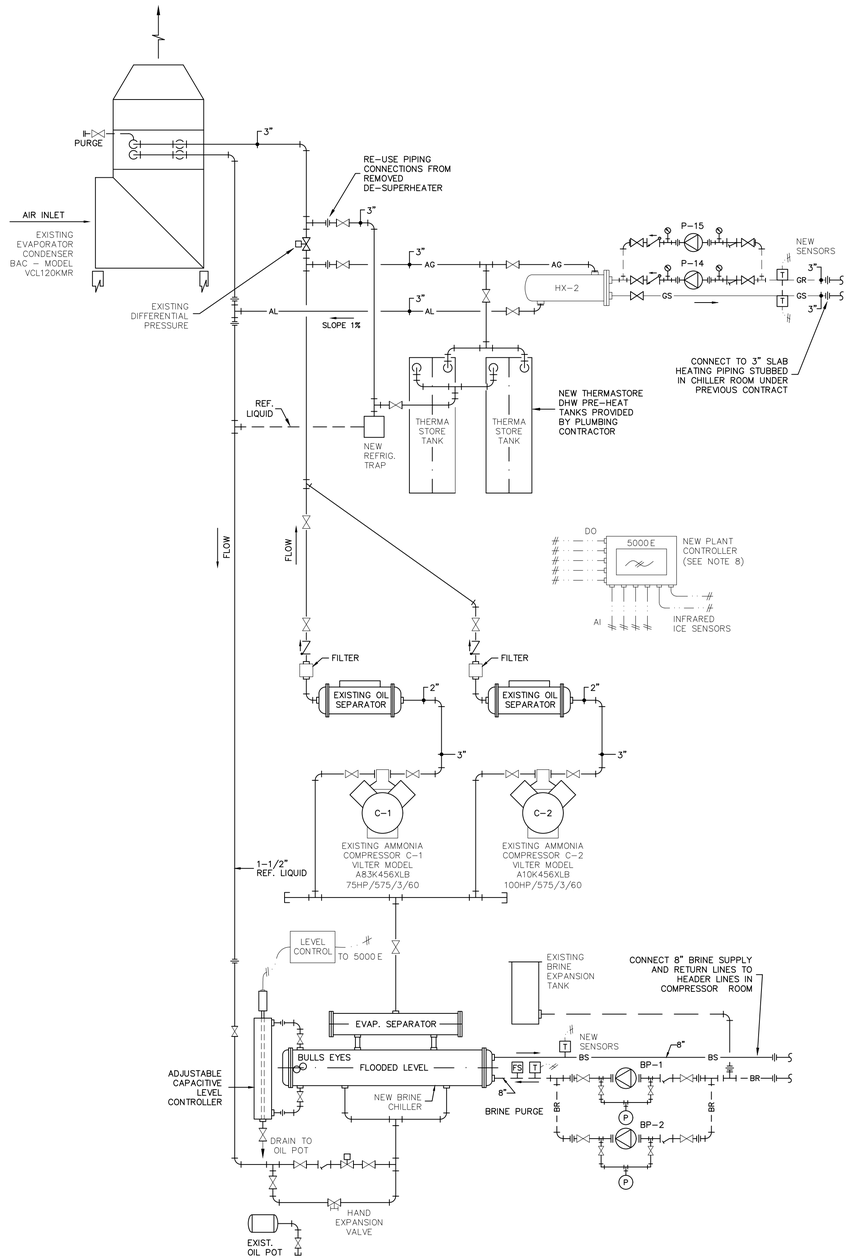

4 M-2 REFRIGERATION PIPING DIAGRAM & CONTROLS SCALE: N.T.S.

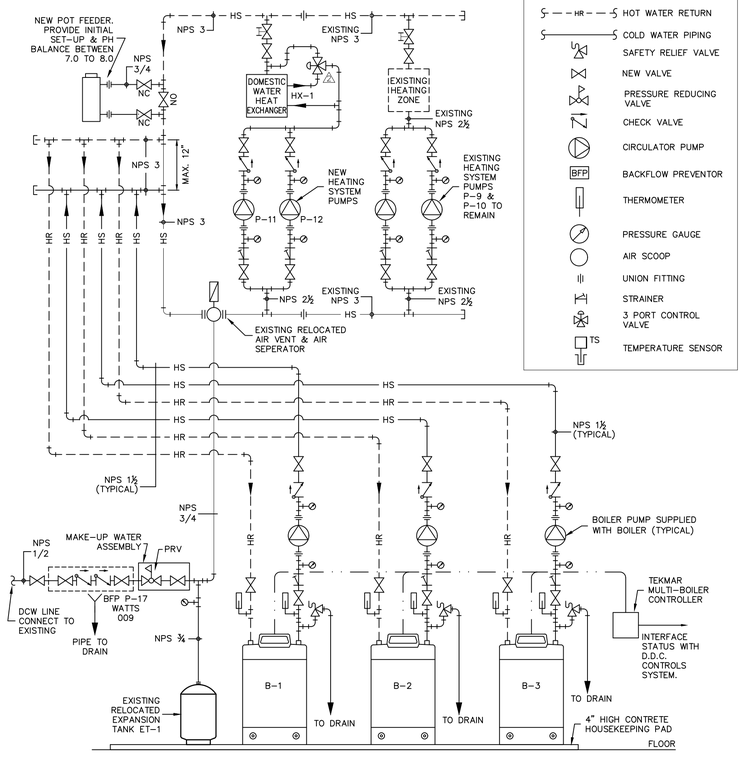

SYMBOL LEGEND

- HS — HOT WATER SUPPLY
- HR — HOT WATER RETURN
- COLD WATER PIPING
- SAFETY RELIEF VALVE
- NEW VALVE
- PRESSURE REDUCING VALVE
- CHECK VALVE
- CIRCULATOR PUMP
- BFP — BACKFLOW PREVENTOR
- THERMOMETER
- PRESSURE GAUGE
- AIR SCOOP
- UNION FITTING
- STRAINER
- 3 PORT CONTROL VALVE
- TS — TEMPERATURE SENSOR

5 M-2 HEATING SYSTEM FLOW DIAGRAM SCALE: N.T.S.

GENERAL NOTES

1. MIXING VALVE SHALL BE SYMMONS MODEL 5–1000, INLETS: 1–1/2" & OUTLET: 2". ADJUST OUTPUT TEMPERATURE OF MIXING VALVE TO 120°F WITH INTERNAL SETSCREW.
2. WALL MOUNT MIXING VALVES WHERE SPACE PERMITS NEAR DOMESTIC WATER PENETRATIONS THROUGH MECHANICAL ROOM WALL.

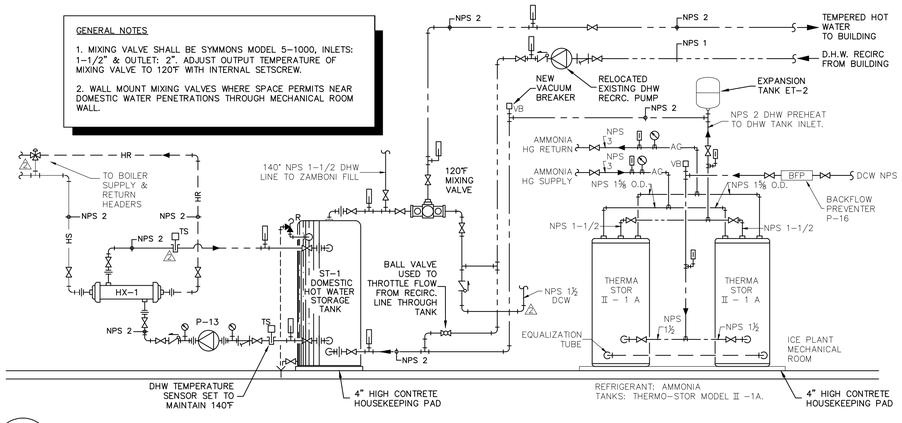

6 M-2 DOMESTIC WATER HEATING SYSTEM FLOW DIAGRAM SCALE: N.T.S.

Contractor must check and verify all dimensions on the job, and report any discrepancies to the Architect before proceeding with the work.

DO NOT SCALE THIS DRAWING.

This drawing will remain the property of Sperry & Partners Limited whether the project for which it is intended is executed or not. It is not to be used by any party on any other project or extensions to this project except by the agreement of, and compensation to, Sperry & Partners Limited. This drawing and accompanying specifications shall not be reproduced in any manner without the express written consent of Sperry & Partners Limited. Copyright © 2007 All Rights Reserved.

General Notes

The Maricor Group
77 Vaughan Harvey Blvd, Suite 200
Moncton, NB E1C 0K2
Bus: (506) 857–8880
Fax: (506) 859–8393
www.maricor.ca
Eng. Job No. 11–07–087

Revisions: Description	No.	Date
ISSUED FOR TENDER	1	MAY 15, 2007
RECORD DRAWING	2	DEC. 31, 2007

Construction North

Stamp

RECORD DRAWING
From AS BUILT drawings supplied by:
MONCTON PLUMBING & SUPPLY CO. LTD.
Dated Oct. 17, 2007

Project Name: AMHERST STADIUM RENOVATION (PHASE 3)
AMHERST, NOVA SCOTIA

Drawing Title: REFRIGERATION & HEATING PIPING DETAILS

Designed	MCG
Drawn	RJM
Checked	MCG
Scale	AS SHOWN
Date	MAY 2007
Project No.	11–07–087
Drawing No.	M–2

PROJECT NO. 11–07–087
PLOT DATE: MAY 15, 2007